Haiku 60 with SenseME Technology

What a Smart Ass™ Fan

The world's first smart fan is now even smarter. Haiku® with SenseME™ monitors temperature conditions and adjusts the fan speed to keep you comfortable, automatically. When you change the speed via an easy-to-use smartphone app or the supplied remote, SenseME remembers your comfort preferences for the future.

Haiku with SenseME works with the Nest Learning Thermostat™ to help you reduce air conditioning use in the summer and heating use in the winter without sacrificing comfort, which means serious savings year-round. Now that's a Smart Ass fan.

SenseME App Features

Motion Sensor
Detects when you enter or leave a room, turning the fan and LED light on and off automatically

Smart Mode
Learns your comfort preferences, automatically adjusting the speed to what you find comfortable

Whoosh® Mode
Silently mimics a natural breeze to make you feel up to 40% cooler

Sleep Mode
Provides customized comfort for your bedroom all night long so you don't wake up freezing or sweating

Scheduling
Set precise schedules for all of Haiku's unique control modes

Wi-Fi
Control your fan manually with the smartphone app and enjoy new features via over-the-air updates

Haiku 60 with SenseME | TECHNICAL SPECIFICATIONS

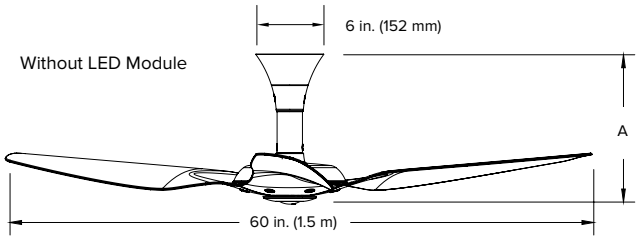

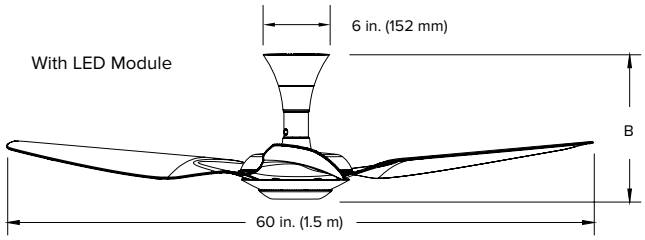

Technical Specifications

Model	Haiku Bamboo Short Mount	
Model number	S3150-S0-XX-XX-02-C[1]	
Fan diameter	60 in. (1.5 m)	
Fan height (A)	12.3 in. (312.4 mm)	
Fan height (B)	12.8 in. (325.1 mm)	
Hanging weight	16 lb (7.3 kg)[2]	
Motor and assembly finishes	Caramel: white, black, satin nickel, oil-rubbed bronze Cocoa: black, satin nickel, oil-rubbed bronze	
Airfoil material	Bamboo	
Airfoil finishes	Caramel or Cocoa	
Number of airfoils	3	
Motor type	EC motor with digital inverter drive	
Number of fan speeds	6	
Operating voltage and frequency	100–125 VAC / 200–240 VAC, 1 Φ, 50–60 Hz	
RPM (min/max)	35/202 RPM	
Amps (min/max)	0.05/0.363 A	
Watts (min/max)	1.32/13.49 W	
Controller	Smartphone app[3]; IR remote supplied	
Optional LED	16 dimmable light settings	
Operational temperature range	32 to 104°F (0 to 40°C)	
Operational humidity range	20–90% non-condensing	
Environment	For indoor use only	
Warranty (Residential)[4]	Motor	Limited Lifetime in the US and Canada
	All other components	1 year in the US and Canada
Warranty (Commercial)[4]	Motor	2 years in the US and Canada
	All other components	1 year in the US and Canada

[1] XX-XX indicates placeholder numbers, which vary depending on LED option, where the fan was built, and other factors.
[2] The actual, precise fan weight will vary based on individual component weights and finishing.
[3] Haiku with SenseME is supported by iPhone® or iPod® mobile digital devices operating on iOS 7.1.2 or newer, and by mobile digital devices operating on Android™ 3.0 or newer. The app will unofficially run on an iPad™ in iPhone compatibility mode. All specifications are subject to change without notice.
[4] Warranties vary by country. See full warranty for details.

Accessories

Standard Remote

Optional LED Module

Airfoil Finishes

Caramel Bamboo

Cocoa Bamboo

Sensors

Environmental sensors	Ambient temperature, surface temperature and relative humidity
Motion	Passive infrared
Communication radio	Embedded Wi-Fi chip

Made in USA
Haiku with SenseME

An ISO 9001:2008 certified company | ©2015 Delta T Corporation dba Big Ass Solutions. All rights reserved

Haiku 60 with SenseME | TECHNICAL SPECIFICATIONS

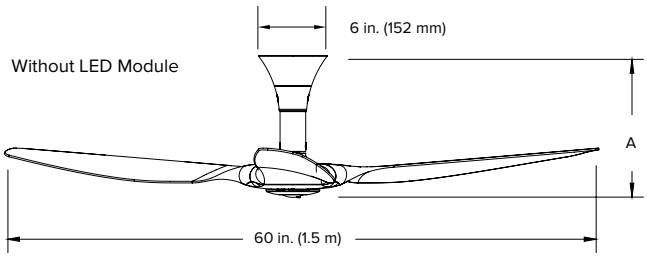

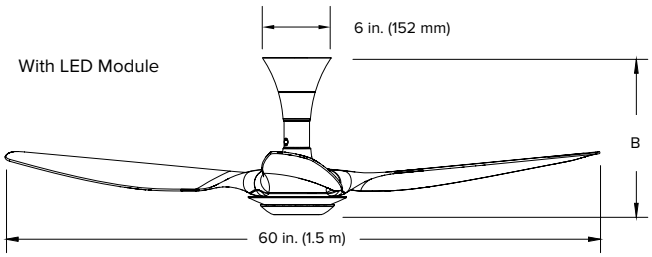

Technical Specifications

Model	Haiku Matrix Composite Short Mount	
Model number	K3150-S0-XX-XX-02-C[1]	
Fan diameter	60 in. (1.5 m)	
Fan height (A)	12 in. (304.8 mm)	
Fan height (B)	12.5 in. (317.5 mm)	
Hanging weight	16 lb (7.3 kg)[2]	
Motor and assembly finishes	Black or white	
Airfoil material	Matrix Composite	
Airfoil finishes	Black or White	
Number of airfoils	3	
Motor type	EC motor with digital inverter drive	
Number of fan speeds	6	
Operating voltage and frequency	100–125 VAC / 200–240 VAC, 1 Φ, 50–60 Hz	
RPM (min/max)	35/202 RPM	
Amps (min/max)	0.05/0.363 A	
Watts (min/max)	1.39/21.34 W	
Controller	Smartphone app[3]; IR remote supplied	
Optional LED	16 dimmable light settings	
Operational temperature range	32 to 104°F (0 to 40°C)	
Operational humidity range	20–90% non-condensing	
Environment	Indoor or covered outdoor use[4]	
Warranty (Residential)[5]	Motor	Limited Lifetime in the US and Canada
	All other components	1 year in the US and Canada
Warranty (Commercial)[5]	Motor	2 years in the US and Canada
	All other components	1 year in the US and Canada

[1] XX-XX indicates placeholder numbers, which vary depending on LED option, where the fan was built, and other factors.
[2] The actual, precise fan weight will vary based on individual component weights and finishing.
[3] Haiku with SenseME is supported by iPhone® or iPod® mobile digital devices operating on iOS 7.1.2 or newer, and by mobile digital devices operating on Android™ 3.0 or newer. The app will unofficially run on an iPad™ in iPhone compatibility mode. All specifications are subject to change without notice.
[4] Certified by ETL to UL507 damp rated applications
[5] Warranties vary by country. See full warranty for details.

Accessories

Standard Remote

Optional LED Module

Airfoil Finishes

Black

White

Sensors

Environmental sensors	Ambient temperature, surface temperature and relative humidity
Motion	Passive infrared
Communication radio	Embedded Wi-Fi chip

Made in USA
Haiku with SenseME

An ISO 9001:2008 certified company | ©2015 Delta T Corporation dba Big Ass Solutions. All rights reserved

Haiku 60 with SenseME | TECHNICAL SPECIFICATIONS

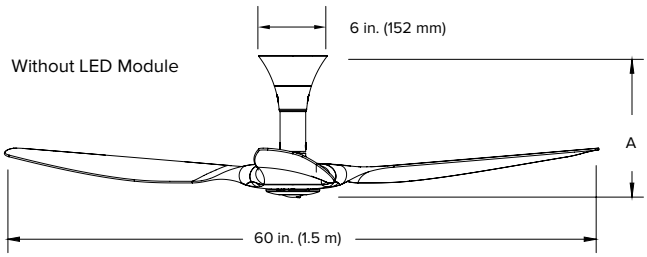

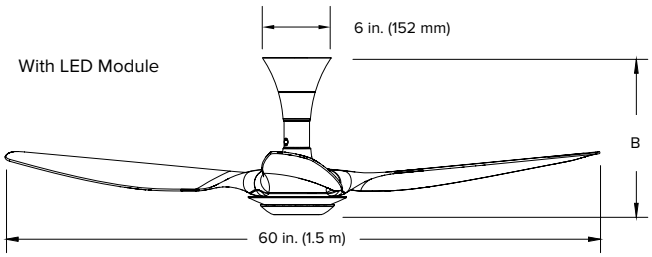

Technical Specifications

Model	Haiku Aluminum Short Mount	
Model number	S3150-S0-AB-04-02-C-F421	
Fan diameter	52 in. (1.3 m)	
Fan height (A)	12.3 in. (312.4 mm)	
Fan height (B)	12.8 in. (325.1 mm)	
Hanging weight	18.5 lb (8.4 kg)[1]	
Motor and assembly finishes	Black or white	
Airfoil material	Aluminum	
Airfoil finishes	Polished Aluminum	
Number of airfoils	3	
Motor type	EC motor with digital inverter drive	
Number of fan speeds	6	
Operating voltage and frequency	100–125 VAC / 200–240 VAC, 1 Φ, 50–60 Hz	
RPM (min/max)	35/202 RPM	
Amps (min/max)	0.05/0.363 A	
Watts (min/max)	1.32/13.49 W	
Controller	Smartphone app[2]; IR remote supplied	
Optional LED	16 dimmable light settings	
Operational temperature range	32 to 104°F (0 to 40°C)	
Operational humidity range	20–90% non-condensing	
Environment	For indoor or covered outdoor use[3]	
Warranty (Residential)[4]	Motor	Limited Lifetime in the US and Canada
	All other components	1 year in the US and Canada
Warranty (Commercial)[4]	Motor	2 years in the US and Canada
	All other components	1 year in the US and Canada

[1] The actual, precise fan weight will vary based on individual component weights and finishing.
[2] Haiku with SenseME is supported by iPhone® or iPod® mobile digital devices operating on iOS 7.1.2 or newer, and by mobile digital devices operating on Android™ 3.0 or newer. The app will unofficially run on an iPad™ in iPhone compatibility mode. All specifications are subject to change without notice.
[3] Certified by ETL to UL507 damp rated applications
[4] Warranties vary by country. See full warranty for details.

Accessories

Standard Remote

Optional LED Module

Airfoil Finishes

Polished Aluminum

Sensors

Environmental sensors	Ambient temperature, surface temperature and relative humidity
Motion	Passive infrared
Communication radio	Embedded Wi-Fi chip

Made in USA
Haiku with SenseME

An ISO 9001:2008 certified company | ©2015 Delta T Corporation dba Big Ass Solutions. All rights reserved

Haiku 60 with SenseME | TECHNICAL SPECIFICATIONS

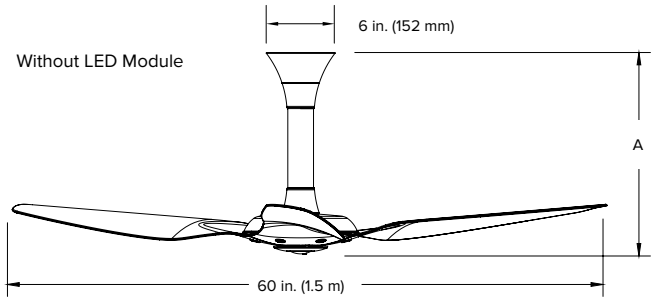

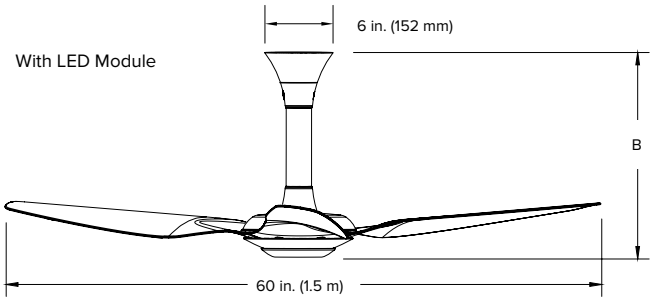

Technical Specifications

Model	Haiku Bamboo Standard Mount	
Model number	S3150-A2-XX-XX-02-C[1]	
Fan diameter	60 in. (1.5 m)	
Fan height (A)	17 in. (431.7 mm)	
Fan height (B)	17.5 in. (444.8 mm)	
Hanging weight	16 lb (7.3 kg)[2]	
Motor and assembly finishes	Caramel: white, black, satin nickel, oil-rubbed bronze Cocoa: black, satin nickel, oil-rubbed bronze	
Airfoil material	Bamboo	
Airfoil finishes	Caramel or Cocoa	
Number of airfoils	3	
Motor type	EC motor with digital inverter drive	
Number of fan speeds	7	
Operating voltage and frequency	100–125 VAC / 200–240 VAC, 1 Φ, 50–60 Hz	
RPM (min/max)	35/202 RPM	
Amps (min/max)	0.05/0.363 A	
Watts (min/max)	1.98/20.21 W	
Controller	Smartphone app[3]; IR remote supplied	
Optional LED	16 dimmable light settings	
Operational temperature range	32 to 104°F (0 to 40°C)	
Operational humidity range	20–90% non-condensing	
Environment	For indoor use only	
Warranty (Residential)[4]	Motor	Limited Lifetime in the US and Canada
	All other components	1 year in the US and Canada
Warranty (Commercial)[4]	Motor	2 years in the US and Canada
	All other components	1 year in the US and Canada

[1] XX-XX indicates placeholder numbers, which vary depending on LED option, where the fan was built, and other factors.
[2] The actual, precise fan weight will vary based on individual component weights and finishing.
[3] Haiku with SenseME is supported by iPhone® or iPod® mobile digital devices operating on iOS 7.1.2 or newer, and by mobile digital devices operating on Android™ 3.0 or newer. The app will unofficially run on an iPad™ in iPhone compatibility mode. All specifications are subject to change without notice.
[4] Warranties vary by country. See full warranty for details.

Accessories

Standard Remote

Optional LED Module

Airfoil Finishes

Caramel Bamboo

Cocoa Bamboo

Sensors

Environmental sensors	Ambient temperature, surface temperature and relative humidity
Motion	Passive infrared
Communication radio	Embedded Wi-Fi chip

Made in USA
Haiku with SenseME

An ISO 9001:2008 certified company | ©2015 Delta T Corporation dba Big Ass Solutions. All rights reserved

Haiku 60 with SenseME | TECHNICAL SPECIFICATIONS

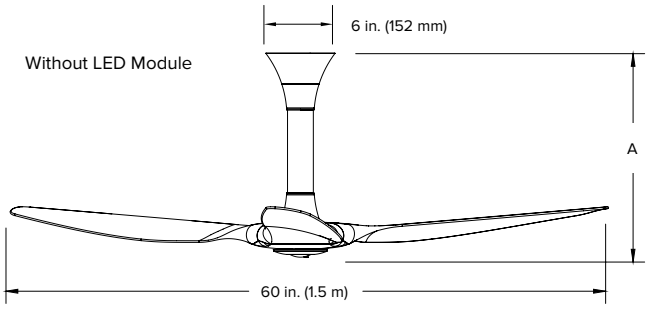

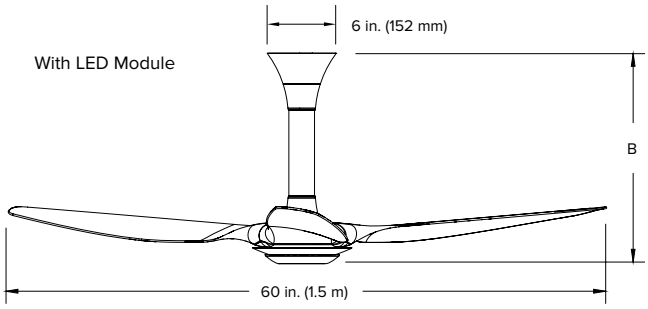

Technical Specifications

Model	Haiku Matrix Composite Standard Mount	
Model number	K3150-A2-XX-XX-02-C[1]	
Fan diameter	60 in. (1.5 m)	
Fan height (A)	16.9 in. (428.5 mm)	
Fan height (B)	17.4 in. (441.7 mm)	
Hanging weight	16 lb (7.3 kg)[2]	
Motor and assembly finishes	Black or white	
Airfoil material	Matrix Composite	
Airfoil finishes	Black or White	
Number of airfoils	3	
Motor type	EC motor with digital inverter drive	
Number of fan speeds	7	
Operating voltage and frequency	100–125 VAC / 200–240 VAC, 1 Φ, 50–60 Hz	
RPM (min/max)	35/202 RPM	
Amps (min/max)	0.05/0.363 A	
Watts (min/max)	2.19/31.27 W	
Controller	Smartphone app[3]; IR remote supplied	
Optional LED	16 dimmable light settings	
Operational temperature range	32 to 104°F (0 to 40°C)	
Operational humidity range	20–90% non-condensing	
Environment	Indoor or covered outdoor use[4]	
Warranty (Residential)[5]	Motor	Limited Lifetime in the US and Canada
	All other components	1 year in the US and Canada
Warranty (Commercial)[5]	Motor	2 years in the US and Canada
	All other components	1 year in the US and Canada

[1] XX-XX indicates placeholder numbers, which vary depending on LED option, where the fan was built, and other factors.
[2] The actual, precise fan weight will vary based on individual component weights and finishing.
[3] Haiku with SenseME is supported by iPhone® or iPod® mobile digital devices operating on iOS 7.1.2 or newer, and by mobile digital devices operating on Android™ 3.0 or newer. The app will unofficially run on an iPad™ in iPhone compatibility mode. All specifications are subject to change without notice.
[4] Certified by ETL to UL507 damp rated applications
[5] Warranties vary by country. See full warranty for details.

Accessories

Standard Remote

Optional LED Module

Airfoil Finishes

Black

White

Sensors

Environmental sensors	Ambient temperature, surface temperature and relative humidity
Motion	Passive infrared
Communication radio	Embedded Wi-Fi chip

Made in USA
Haiku with SenseME

BIG ASS FANS

An ISO 9001:2008 certified company | ©2015 Delta T Corporation dba Big Ass Solutions. All rights reserved

Haiku 60 with SenseME | TECHNICAL SPECIFICATIONS

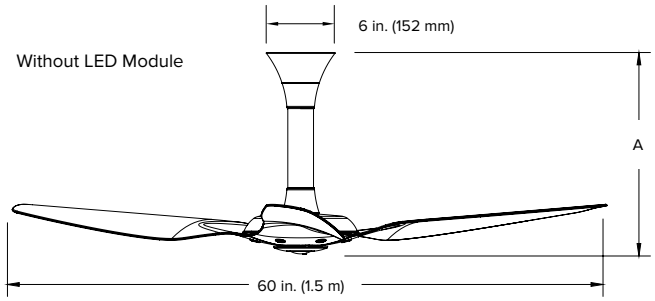

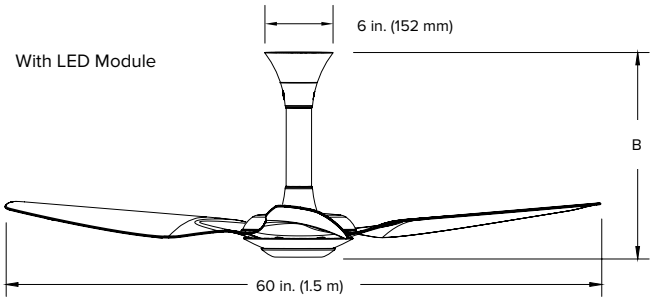

Technical Specifications

Model	Haiku Aluminum Standard Mount	
Model number	S3150-A2-AB-04-02-C-F421	
Fan diameter	52 in. (1.3 m)	
Fan height (A)	17 in. (431.8 mm)	
Fan height (B)	17.5 in. (444.5 mm)	
Hanging weight	18.5 lb (8.4 kg)[1]	
Motor and assembly finishes	Black or white	
Airfoil material	Aluminum	
Airfoil finishes	Polished Aluminum	
Number of airfoils	3	
Motor type	EC motor with digital inverter drive	
Number of fan speeds	7	
Operating voltage and frequency	100–125 VAC / 200–240 VAC, 1 Φ, 50–60 Hz	
RPM (min/max)	35/202 RPM	
Amps (min/max)	0.05/0.363 A	
Watts (min/max)	1.98/20.21 W	
Controller	Smartphone app[2]; IR remote supplied	
Optional LED	16 dimmable light settings	
Operational temperature range	32 to 104°F (0 to 40°C)	
Operational humidity range	20–90% non-condensing	
Environment	For indoor or covered outdoor use[3]	
Warranty (Residential)[4]	Motor	Limited Lifetime in the US and Canada
	All other components	1 year in the US and Canada
Warranty (Commercial)[4]	Motor	2 years in the US and Canada
	All other components	1 year in the US and Canada

[1] The actual, precise fan weight will vary based on individual component weights and finishing.
[2] Haiku with SenseME is supported by iPhone® or iPod® mobile digital devices operating on iOS 7.1.2 or newer, and by mobile digital devices operating on Android™ 3.0 or newer. The app will unofficially run on an iPad™ in iPhone compatibility mode. All specifications are subject to change without notice.
[3] Certified by ETL to UL507 damp rated applications
[4] Warranties vary by country. See full warranty for details.

Accessories

Standard Remote

Optional LED Module

Airfoil Finishes

Polished Aluminum

Sensors

Environmental sensors	Ambient temperature, surface temperature and relative humidity
Motion	Passive infrared
Communication radio	Embedded Wi-Fi chip

Made in USA
Haiku with SenseME

BIG ASS FANS

An ISO 9001:2008 certified company | ©2015 Delta T Corporation dba Big Ass Solutions. All rights reserved

Haiku 60 with SenseME | TECHNICAL SPECIFICATIONS

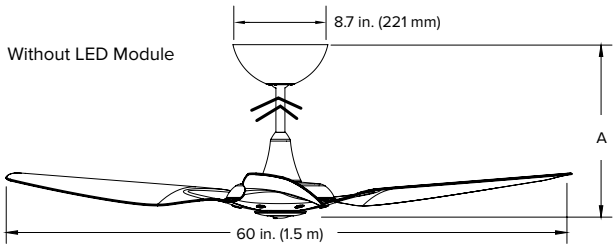

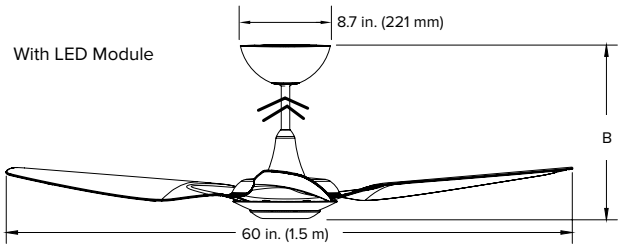

Technical Specifications

Model	Haiku Bamboo Extended Mount				
Model number	S3150-X2-XX-XX-02-C[1]				
Extension Length	7 in. (177.8 mm)	20 in. (508 mm)	32 in. (812.8 mm)	48 in. (1219.2 mm)	60 in. (1524 mm)
Fan diameter	60 in. (1.5 m)				
Fan height (A)	16 in. (406.4 mm)	29 in. (736.6 mm)	41 in. (1041.4 mm)	57 in. (1447.8 mm)	69 in. (1752.6 mm)
Fan height (B)	16.5 in. (419.1 mm)	29.5 in. (749.3 mm)	41.5 in. (1054.1 mm)	57.5 in. (1460.5 mm)	69.5 in. (1765.3 mm)
Hanging weight	15 lb (6.8 kg)[2]				
Motor and assembly finishes	Caramel: white, black, satin nickel, oil-rubbed bronze Cocoa: black, satin nickel, oil-rubbed bronze				
Airfoil material	Bamboo				
Airfoil finishes	Caramel or Cocoa				
Number of airfoils	3				
Motor type	EC motor with digital inverter drive				
Number of fan speeds	7				
Operating voltage and frequency	100–125 VAC / 200–240 VAC, 1 Φ, 50–60 Hz				
RPM (min/max)	35/198 RPM				
Amps (min/max)	0.05/0.363 A				
Watts (min/max)	1.97/19.86 W				
Controller	Smartphone app[3]; IR remote supplied				
Optional LED	16 dimmable light settings				
Operational temperature range	32 to 104°F (0 to 40°C)				
Operational humidity range	20–90% non-condensing				
Environment	For indoor use only				
Warranty (Residential)[5]	Motor	Limited Lifetime in the US and Canada			
	All other components	1 year in the US and Canada			
Warranty (Commercial)[5]	Motor	2 years in the US and Canada			
	All other components	1 year in the US and Canada			

[1] XX-XX indicates placeholder numbers, which vary depending on LED option, where the fan was built, and other factors.
[2] The actual, precise fan weight will vary based on individual component weights and finishing.
[3] Haiku with SenseME is supported by iPhone® or iPod® mobile digital devices operating on iOS 7.1.2 or newer, and by mobile digital devices operating on Android™ 3.0 or newer. The app will unofficially run on an iPad™ in iPhone compatibility mode. All specifications are subject to change without notice.
[4] Warranties vary by country. See full warranty for details.

Accessories

Standard Remote

Optional LED Module

Airfoil Finishes

Caramel

Cocoa

Sensors

Environmental sensors	Ambient temperature, surface temperature and relative humidity
Motion	Passive infrared
Communication radio	Embedded Wi-Fi chip

Made in USA
Haiku with SenseME

An ISO 9001:2008 certified company | ©2015 Delta T Corporation dba Big Ass Solutions. All rights reserved

Haiku 60 with SenseME | TECHNICAL SPECIFICATIONS

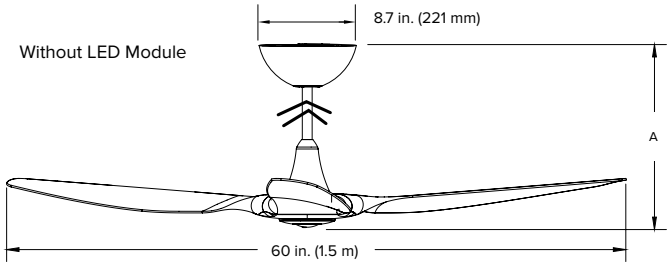

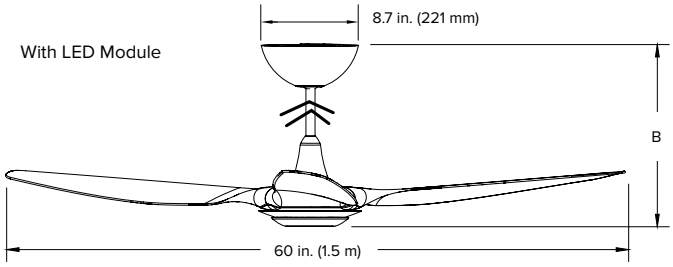

Technical Specifications

Model	Haiku Matrix Composite Extended Mount				
Model number	K3150-X2-XX-XX-02-C[1]				
Extension Length	7 in. (177.8 mm)	20 in. (508 mm)	32 in. (812.8 mm)	48 in. (1219.2 mm)	60 in. (1524 mm)
Fan diameter	60 in. (1.5 m)				
Fan height (A)	15.7 in. (399 mm)	28.7 in. (729 mm)	40.7 in. (1033.8 mm)	56.7 in. (1440.2 mm)	68.7 in. (1745 mm)
Fan height (B)	16.2 in. (411.5 mm)	29.2 in. (741.7 mm)	41.2 in. (1046.5 mm)	57.2 in. (1452.9 mm)	69.2 in. (1757.7 mm)
Hanging weight	15 lb (6.8 kg)[2]				
Motor and assembly finishes	Black or white				
Airfoil material	Matrix Composite				
Airfoil finishes	Black or White				
Number of airfoils	3				
Motor type	EC motor with digital inverter drive				
Number of fan speeds	7				
Operating voltage and frequency	100–125 VAC / 200–240 VAC, 1 Φ, 50–60 Hz				
RPM (min/max)	35/198 RPM				
Amps (min/max)	0.05/0.363 A				
Watts (min/max)	2.05/29.93 W				
Controller	Smartphone app[3]; IR remote supplied				
Optional LED	16 dimmable light settings				
Operational temperature range	32 to 104°F (0 to 40°C)				
Operational humidity range	20–90% non-condensing				
Environment	For indoor or covered outdoor use[4]				
Warranty (Residential)[5]	Motor	Limited Lifetime in the US and Canada			
	All other components	1 year in the US and Canada			
Warranty (Commercial)[5]	Motor	2 years in the US and Canada			
	All other components	1 year in the US and Canada			

[1] XX-XX indicates placeholder numbers, which vary depending on LED option, where the fan was built, and other factors.
[2] The actual, precise fan weight will vary based on actual individual component weights and finishing.
[3] Haiku with SenseME is supported by iPhone® or iPod® mobile digital devices operating on iOS 7.1.2 or newer, and by mobile digital devices operating on Android™ 3.0 or newer. The app will unofficially run on an iPad™ in iPhone compatibility mode. All specifications are subject to change without notice.
[4] Certified by ETL to UL507 damp rated applications
[5] Warranties vary by country. See full warranty for details.

Accessories

Standard Remote

Optional LED Module

Airfoil Finishes

Black

White

Sensors

Environmental sensors	Ambient temperature, surface temperature and relative humidity
Motion	Passive infrared
Communication radio	Embedded Wi-Fi chip

An ISO 9001:2008 certified company | ©2015 Delta T Corporation dba Big Ass Solutions. All rights reserved

Haiku 60 with SenseME | TECHNICAL SPECIFICATIONS

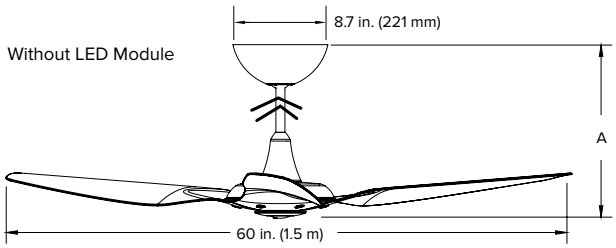

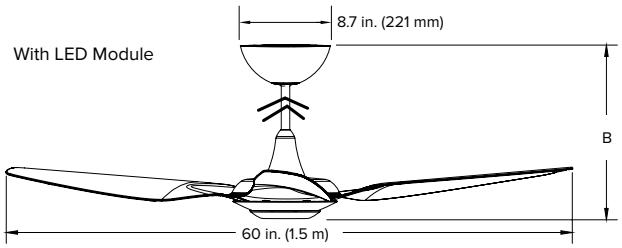

Technical Specifications

Model	Haiku Aluminum Extended Mount				
Model number	S3150-X2-AB-04-02-C-F421				
Extension Length	7 in. (177.8 mm)	20 in (508 mm)	32 in (812.8 mm)	48 in (1219.2 mm)	60 in (1524 mm)
Fan diameter	60 in. (1.5 m)				
Fan height (A)	16 in. (406.4 mm)	29 in (736.6 mm)	41 in (1041.4 mm)	57 in. (1447.8 mm)	69 in. (1752.6 mm)
Fan height (B)	16.5 in (419.1 mm)	29.5 in (749.3 mm)	41.5 in (1054.1 mm)	57.5 in. (1460.5 mm)	69.5 in. (1765.3 mm)
Hanging weight	17.5 lb (8 kg)[1]				
Motor and assembly finishes	Black or white				
Airfoil material	Aluminum				
Airfoil finishes	Polished Aluminum				
Number of airfoils	3				
Motor type	EC motor with digital inverter drive				
Number of fan speeds	7				
Operating voltage and frequency	100–125 VAC / 200–240 VAC, 1 Φ, 50–60 Hz				
RPM (min/max)	35/198 RPM				
Amps (min/max)	0.05/0.363 A				
Watts (min/max)	1.97/19.86 W				
Controller	Smartphone app[2]; IR remote supplied				
Optional LED	16 dimmable light settings				
Operational temperature range	32 to 104°F (0 to 40°C)				
Operational humidity range	20–90% non-condensing				
Environment	For indoor or covered outdoor use[3]				
Warranty (Residential)[5]	Motor	Limited Lifetime in the US and Canada			
	All other components	1 year in the US and Canada			
Warranty (Commercial)[5]	Motor	2 years in the US and Canada			
	All other components	1 year in the US and Canada			

[1] The actual, precise fan weight will vary based on individual component weights and finishing.
[2] Haiku with SenseME is supported by iPhone® or iPod® mobile digital devices operating on iOS 7.1.2 or newer, and by mobile digital devices operating on Android™ 3.0 or newer. The app will unofficially run on an iPad™ in iPhone compatibility mode. All specifications are subject to change without notice.
[3] Certified by ETL to UL507 damp rated applications
[4] Warranties vary by country. See full warranty for details.

Accessories

Standard Remote

Optional LED Module

Airfoil Finishes

Polished Aluminum

Sensors

Environmental sensors	Ambient temperature, surface temperature and relative humidity
Motion	Passive infrared
Communication radio	Embedded Wi-Fi chip

Made in USA
Haiku with SenseME

BIG ASS FANS

An ISO 9001:2008 certified company | ©2015 Delta T Corporation dba Big Ass Solutions. All rights reserved

Optional Accessory:

Haiku LED Kit | TECHNICAL SPECIFICATIONS

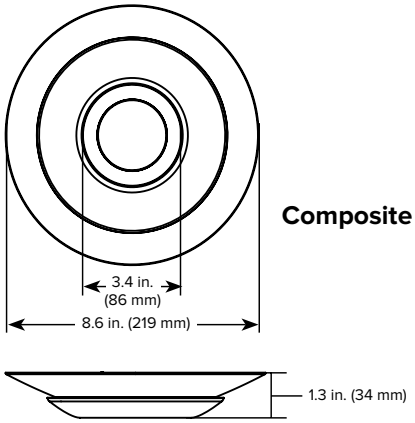

Composite LED

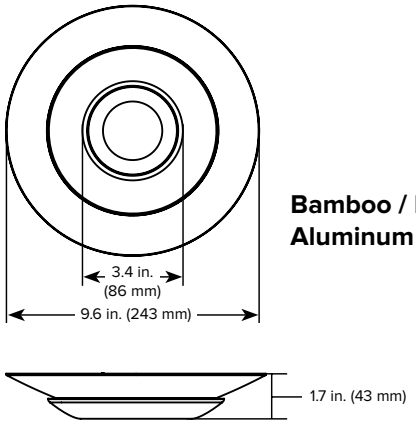

Bamboo / Polished Aluminum LED

Technical Specifications

Operating voltage	12VDC/24VDC
Operating current	1.5 Adc (100% PWM)
Nominal input power	16.3 W
Operating temperature	32 to 104°F (0 to 40°C)
Lens diameter	5.7 in. (145 mm)
Nominal lumen output	1280 Lm
CRI	82
Corresponding color temperature	2700 K
Dimming range	3–100%
Operating life expectancy	50,000 hours
Lens color	Diffused clear and smoky options included
Controller	On/off control Digital dimmer
Warranty	1 year in the US and Canada*

* 1 year warranty available in the US and Canada; certain exclusions apply. Warranties vary by country. See full warranty for details.

 | ©2015 Delta T Corporation dba the Big Ass Fan Company. All rights reserved