Versatile Wallpack VL20 Installation Instructions

Warning:

Please read instructions carefully before attempting to install fixture and save instructions for future reference.

To avoid the risk of fire or electric shock, this product should be installed, inspected, and maintained by a qualified electrician only, in accordance with all applicable electrical codes. No user serviceable parts inside.

- Ensure electrical power is OFF before and during installation and maintenance.
- Luminaire must be connected to a wiring system with an equipment-grounding conductor.
- Make sure the supply voltage is the same as the rated luminaire voltage.
- Do not install where marked operating temperatures exceed the ignition temperature of the hazardous atmosphere.
- Do not operate in ambient temperatures above those indicated on the luminaire specifications.
- Keep lens tightly closed when in operation.
- Use wire rated for at least 80°C.
- Apply weatherproof silicone sealant around mounting box edges for enhanced moisture ingress protection. This is particularly important for installations on irregular wall surfaces.

Installation: Junction Box Mounting

Step 1

Open the back box by using philips screwdriver (FIG. 1), confirm junction box size prior to removing the gasket material for the application (FIG. 2). ONLY remove the gasket material needed for the installation. Mount back box to junction box via supplied hardware or lag mount. Utilize any junction box pairings for lag mount (Example: 5-5). Lag mount hardware provided by others.

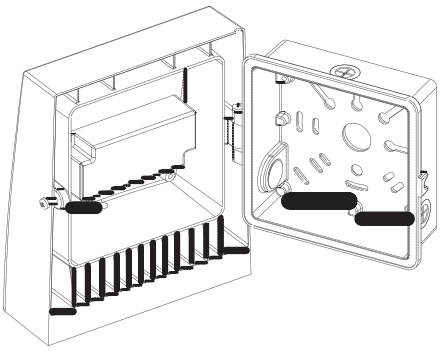

FIG. 1

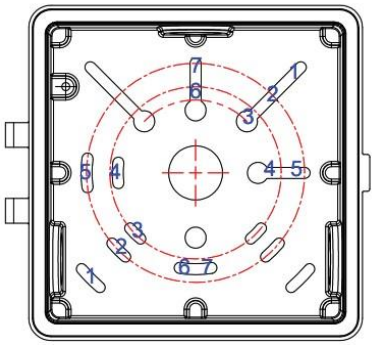

FIG. 2

Junction Box Mounting guide	
1-1	4” Square Box
2-2	4” Octagonal Box
3-3	3-1/2” Square/Octagonal Box
4-4	Masonry Box
5-5	4” Round Box
6-6	2-3/4” Hole Pattern
7-7	Single Gang

2348 Innovation Dr | Lexington, KY 40511
(p) 877-244-3267 | www.bigasssolutions.com

Step 2

Utilize twist-on connectors to make electrical connections (FIG. 3, 4). All electrical connections must remain inside back box. Fasten the wires by a provided cable tie, prior to closing and securing enclosure.

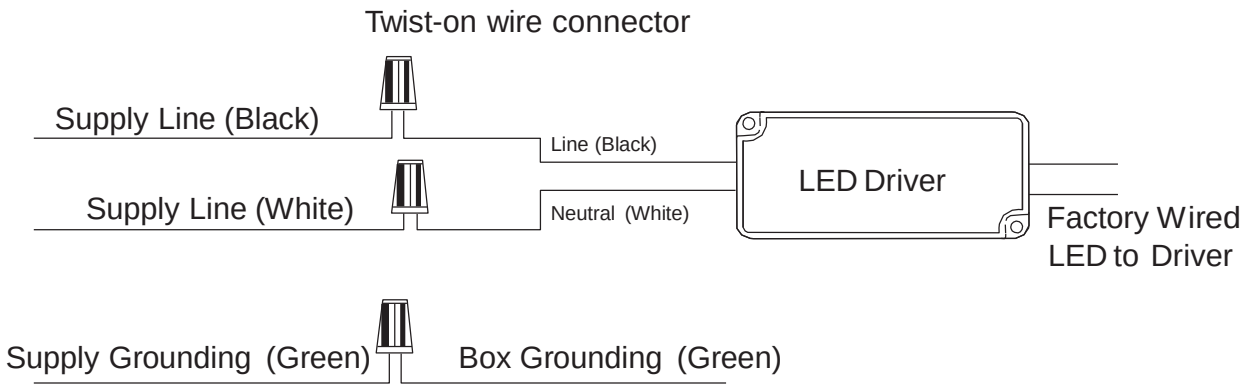

Fig. 3: Typical wiring layout

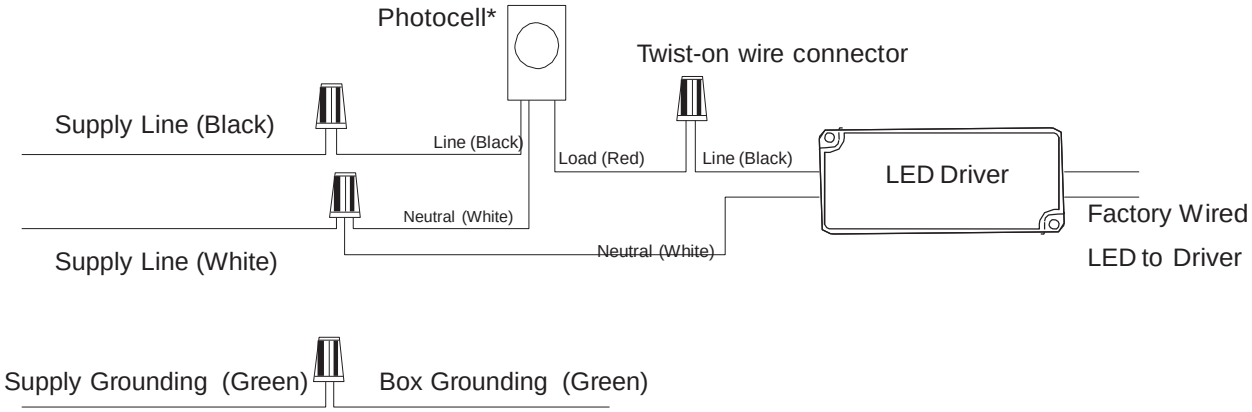

Fig 4: Wiring layout with photocell*

Step 3

Tighten enclosure screw to seal fixture. (FIG. 5)

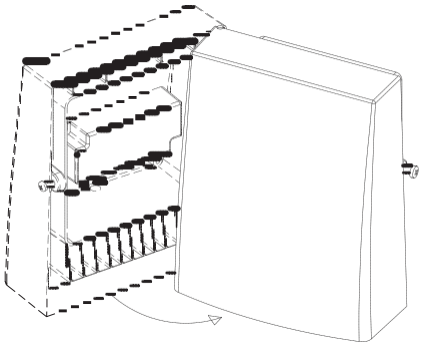

FIG. 5

After installation:

- Check if the lighting fixture is firmly mounted.
- Check if the wires are connected properly.
- Turn on Power: Check if the lighting fixture works properly. If not, please contact local dealer for troubleshooting.

* Provided by others