The Big Ass Inverted 40K LED

Big Ass Lights are high-performance, high-efficiency LED luminaires. This inverted 40k lumen fixture is engineered to be the ideal lighting solution for spaces where downward lighting is not desired, such as indoor sports facilities. Featuring a heavy-duty, extruded aluminum housing that provides superior heat dissipation and impact resistance, this Big Ass Light was designed with long-term performance and energy efficiency in mind and is sold with a seven-year warranty. Its patent-pending lumen maintenance tray not only protects the LEDs from dirt and debris, it also provides multiple options for optimal light distribution.

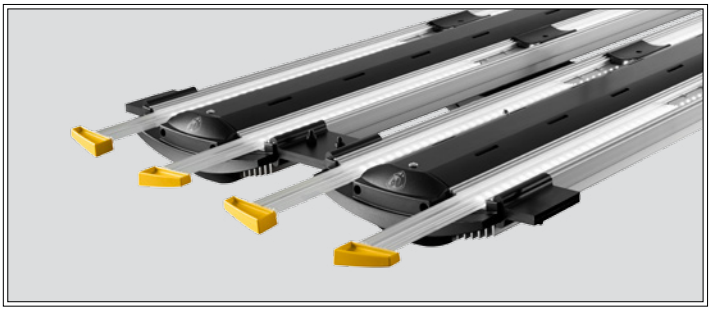

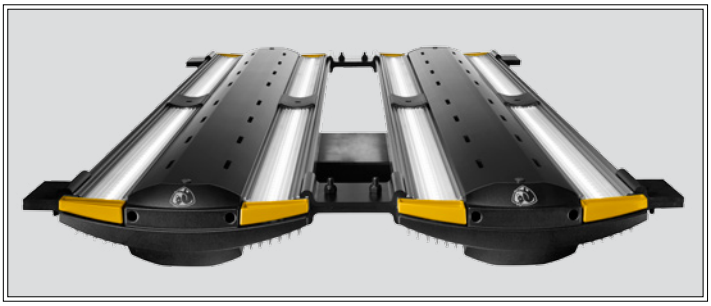

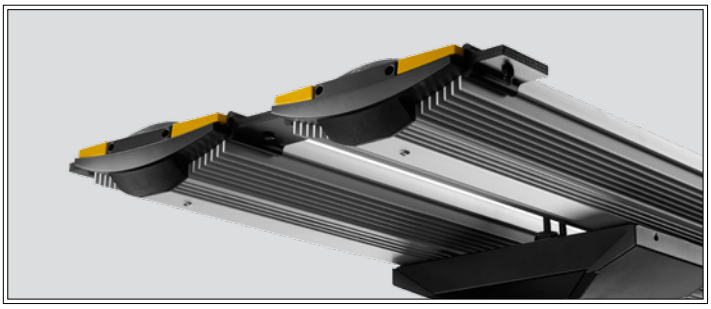

Features and benefits

- Directs light upward for bright, indirect illumination
- Complete seven-year product warranty
- Patent-pending lumen maintenance tray directs light from 55 to 115 degrees
- Heavy-duty anodized, extruded aluminum construction
- Single piece aluminum housing for improved heat dissipation
- Maintains 70 percent of initial lumen output for up to 150,000 hours
- Fixtures available with a single or dual power cord option

Inverted High Bay LED 40K | TECHNICAL SPECIFICATIONS

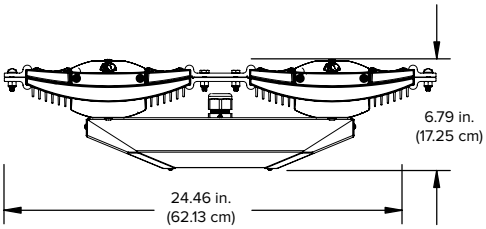

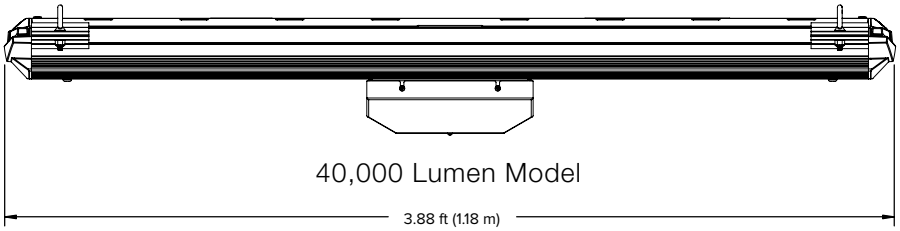

Ordering Information

Lighting	Series	Lumen Output	Color Temperature	System Voltage	Lumen Maintenance Tray	Cord Length[1]	Mounting Hardware	Controls	Inverted
BAL	HBL1	40: 40,000 lm	04: 4000K 05: 5000K	01: 120/277 V 02: 347/480 V[4]	01: Narrow 02: Regular 03: Wide 04: Diffused 05: Super Narrow	10: 10 ft (3.05 m)	01: Fixture clamps [includes 10-ft (3.05-m) aircraft "Y" cables]	03: External dimming cable	S7

Note: Lead times may vary depending on options selected

Light Output[3]

High Bay LED Series	Wattage	Efficacy[4]	Color Temperature	Typical CRI
40,000 Lumen	388 W	108 lumens/watt	4000 K, 5000 K	70+

Note: Light output numbers reflect fixture without lumen maintenance tray

Weight	54 lb (24.5 kg)
Power input	120/277 V; 347/480 V[5]
Dimming	0–10 V
Sensors	Optional programmable, onboard occupancy/photo sensor with wireless remote
Reliability	L70 predicted to exceed 150,000 hours at 25° C (77° F)
Environment	Suitable for dry and damp interior environments
Construction	Extruded anodized aluminum housing (single piece) for each fixture
Maintenance	Zero tool access to lumen maintenance tray; hinged door access to power supplies
Ambient operating temperature	-35 to 55° C (-31 to 131° F)
Warranty	7 year complete fixture warranty; warranty includes power supplies[6]

[1] Please consult manufacturer for custom cord lengths
[2] Dual-cord fixture without junction box also available; please consult manufacturer for details
[3] Measured at 25° C ambient
[4] Measured at 5,000 K color temperature
[5] Internal high voltage driver, voltage specific
[6] 7-year warranty available in the US and Canada; certain exclusions apply. Warranties vary by country. See complete warranty for details

BIG ASS LIGHT

An ISO 9001:2008 certified company | ©2015 Delta T Corporation dba the Big Ass Solutions. All rights reserved